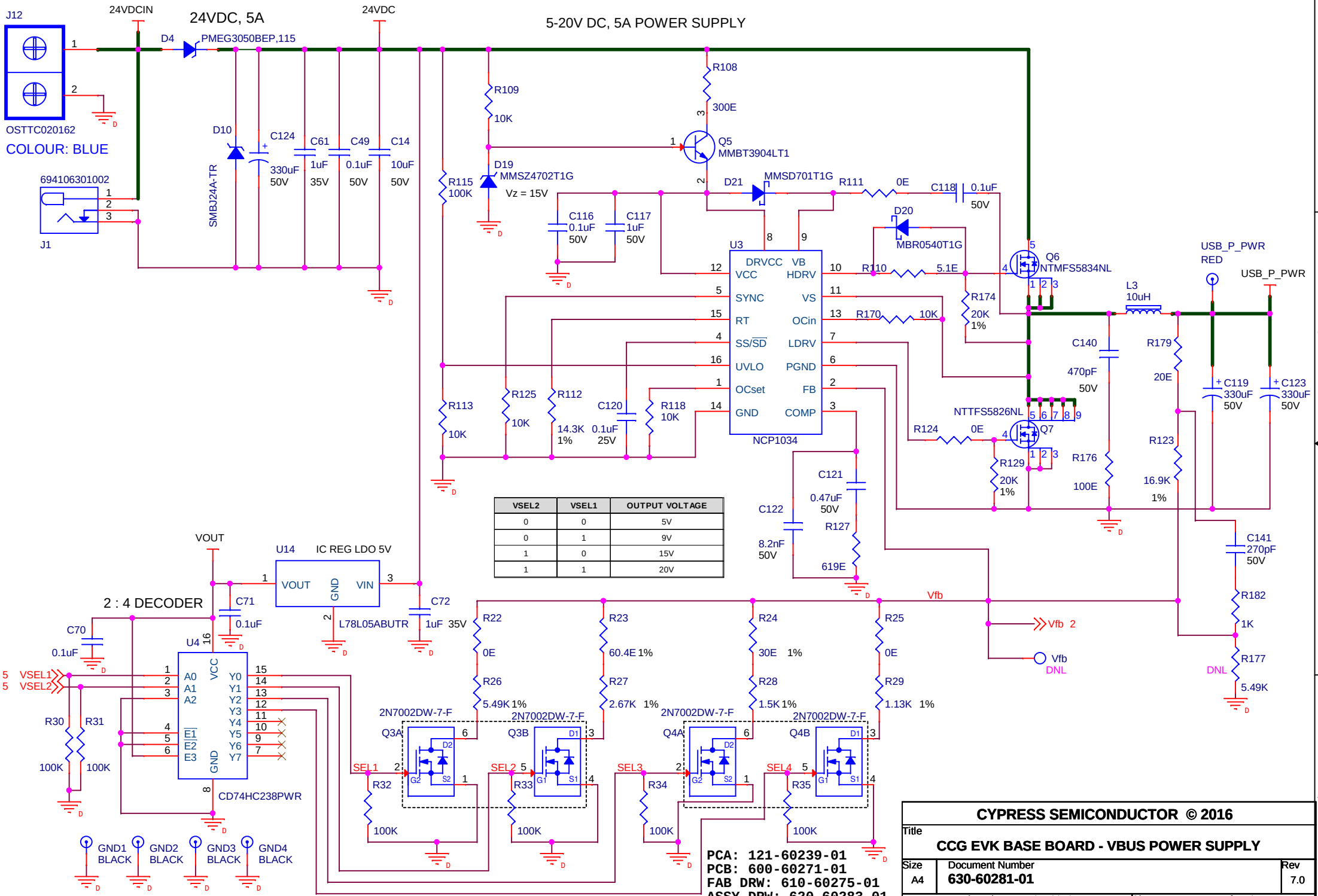

VSEL2	VSEL1	OUTPUT VOLTAGE
0	0	5V
0	1	9V
1	0	15V
1	1	20V

PCA: 121-60239-01
PCB: 600-60271-01
FAB DRW: 610-60275-01
ASSY DRW: 620-60283-01

CYPRESS SEMICONDUCTOR © 2016

Title: CCG EVK BASE BOARD - VBUS POWER SUPPLY

Size	Document Number	Rev
A4	630-60281-01	7.0

Date: Thursday, May 05, 2016 Sheet 1 of 6

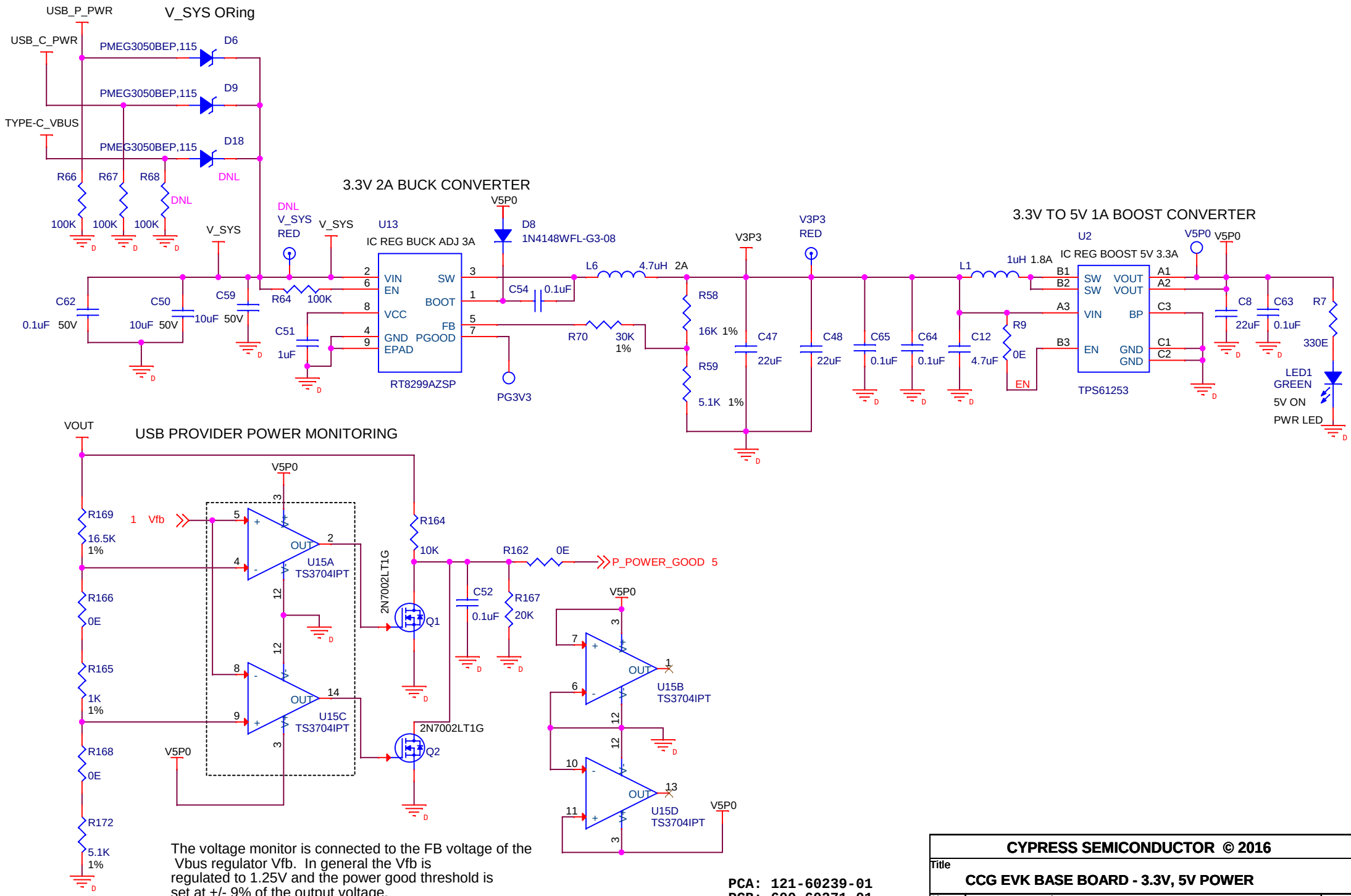

The voltage monitor is connected to the FB voltage of the Vbus regulator Vfb. In general the Vfb is regulated to 1.25V and the power good threshold is set at +/- 9% of the output voltage.

PCA: 121-60239-01
PCB: 600-60271-01
FAB DRW: 610-60275-01
ASSY DRW: 620-60283-01

CYPRESS SEMICONDUCTOR © 2016

Title	CCG EVK BASE BOARD - 3.3V, 5V POWER
Size	A4
Document Number	630-60281-01
Rev	7.0
Date:	Wednesday, May 04, 2016
Sheet	2 of 6

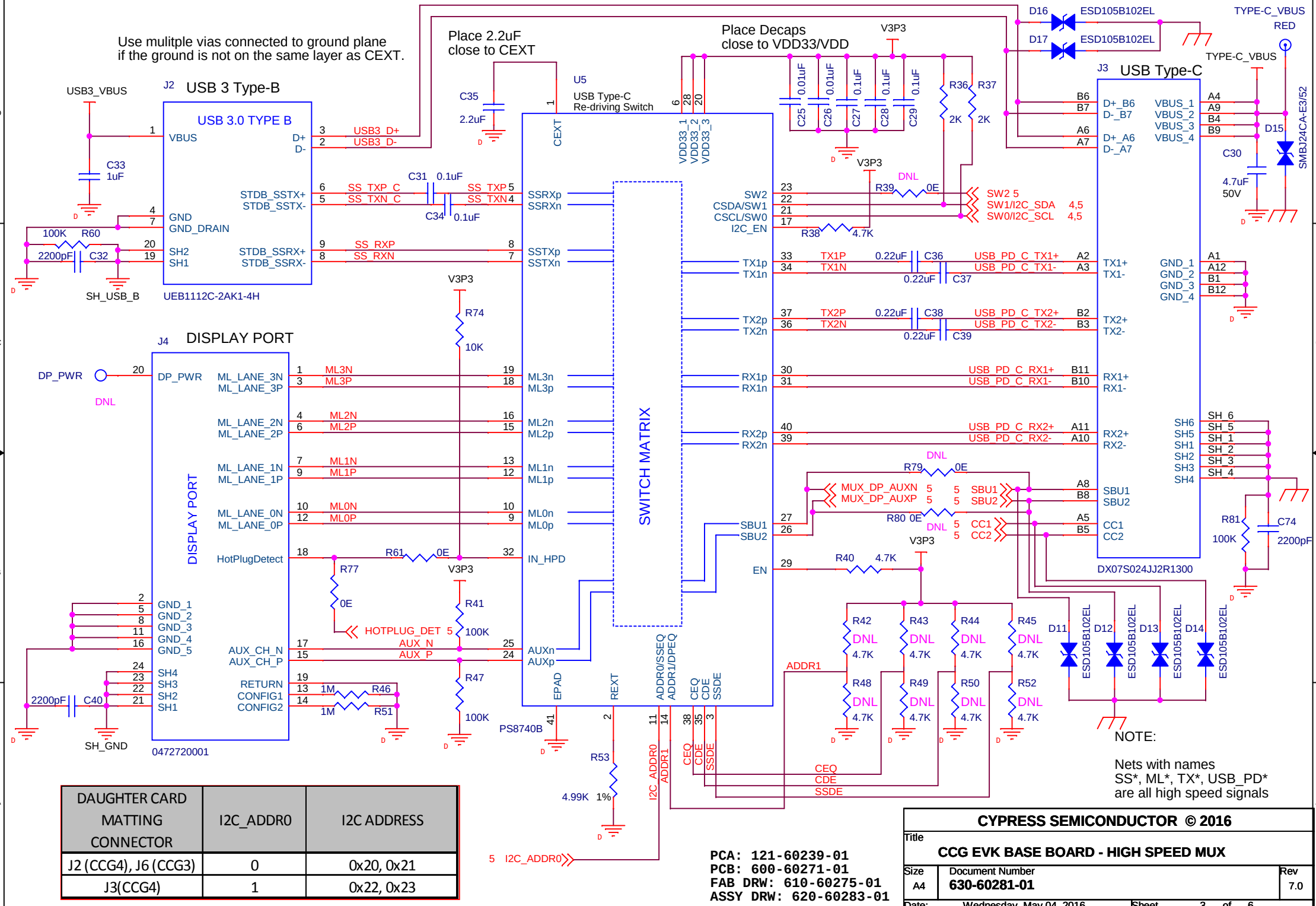

DAUGHTER CARD MATTING CONNECTOR	I2C_ADDR0	I2C ADDRESS
J2 (CCG4), J6 (CCG3)	0	0x20, 0x21
J3(CCG4)	1	0x22, 0x23

PCA: 121-60239-01
PCB: 600-60271-01
FAB DRW: 610-60275-01
ASSY DRW: 620-60283-01

CYPRESS SEMICONDUCTOR © 2016

Title: **CCG EVK BASE BOARD - HIGH SPEED MUX**

Size	Document Number	Rev
A4	**630-60281-01**	7.0

Date: Wednesday, May 04, 2016 Sheet 3 of 6

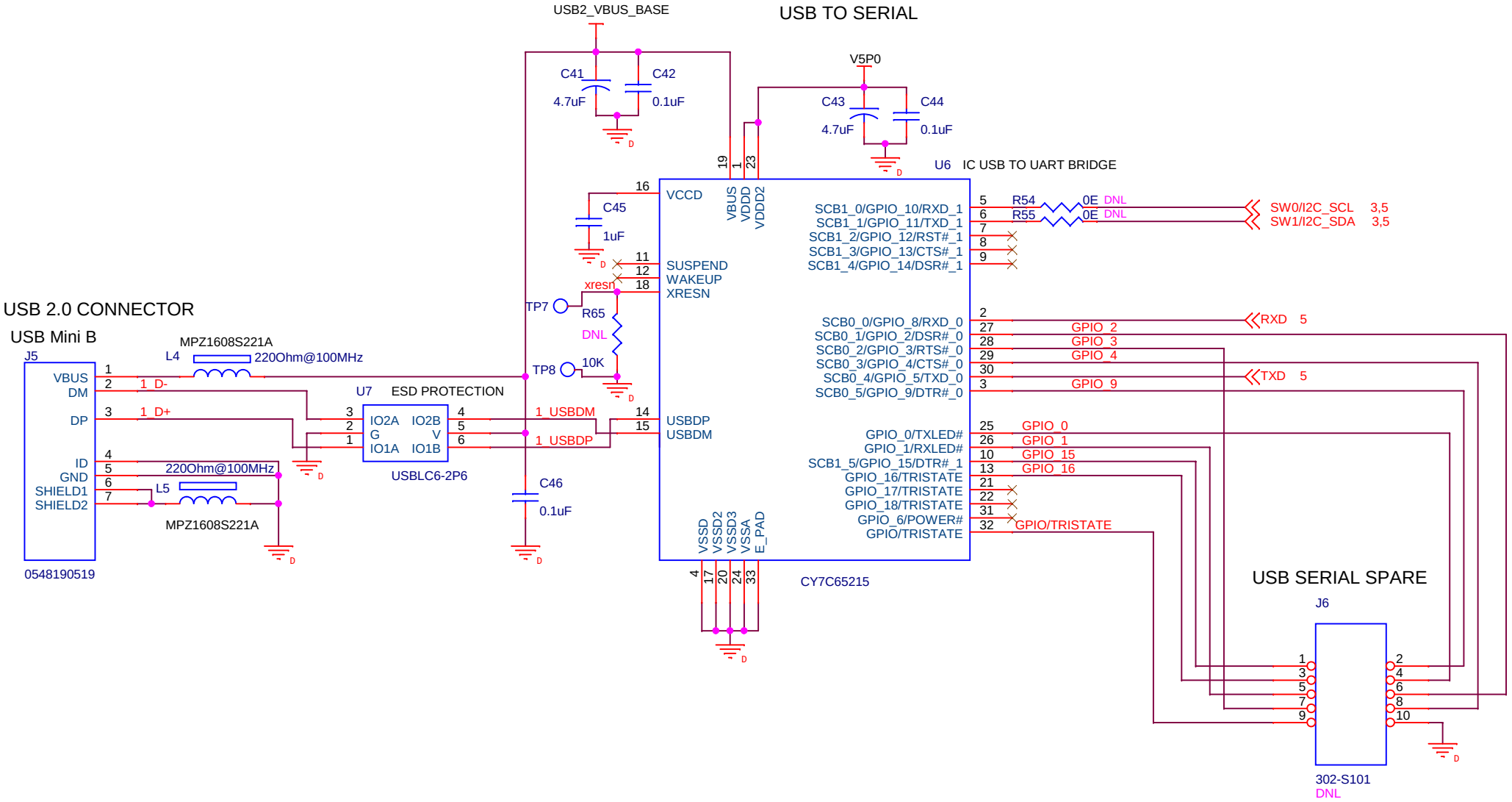

PCA: 121-60239-01
PCB: 600-60271-01
FAB DRW: 610-60275-01
ASSY DRW: 620-60283-01

CYPRESS SEMICONDUCTOR © 2016

Title: **CCG EVK BASE BOARD - USB TO SERIAL**

Size	Document Number	Rev
A4	**630-60281-01**	7.0

Date: Wednesday, May 04, 2016 Sheet 4 of 6

CONSUMER POWER OUTPUT
5 - 20V DC

USB_C_PWR
RED

J7

1935161

COLOUR: GREEN

CCG DAUGHTER CARD INTERFACE CONNECTOR

USB_C_PWR
USB_P_PWR
TYPE-C_VBUS

J8

SFH11-PBPC-D20-ST-BK

V5P0
V3P3

3,4,5 SW0/I2C_SCL
3,4,5 SW1/I2C_SDA
5 OCP
2 P_POWER_GOOD
1,5 VSEL2
3,5 CC1
4 RXD
4 TXD
3 MUX_DP_AUXN
3 MUX_DP_AUXP
3 SBU2
3 SBU1
5 I2C_SCL_EC
1,5 VSEL1

VBUS_DISCHRG 5
CCG_SWD_IO 5
CCG_SWD_CLK 5
CCG_XRES 5
I2C_ADDR0 3
VCONN_MON
VCONN_MON DNL
CC2 3,5
VBUS_P_CTRL 1,5
VBUS_MON_GPIO 5 5
I2C_INT_EC 5
VBUS_C_CTRL 5
OVP_TRIP 5
I2C_SDA_EC 5
HOTPLUG_DET 3,5
USB2_DP/SW1_P2
USB2_DM/SW0_P2
TP12 DNL
TP11 DNL

R73
0E
J11
961102-6404-AR
DEFAULT:
JUMPER CLOSED

R56
1K
R57
1K
SW1
EVQ-PE105K
LED2
ORANGE

USER BUTTON / LED

DEBUG CONNECTOR

TYPE-C_VBUS
J9
SBH11-PBPC-D12-ST-BK

5 CCG_SWD_IO
3,5 CC1
5 I2C_SCL_EC
5 I2C_INT_EC
3,4,5 SW0/I2C_SCL
3 SW2
5 CCG_SWD_CLK
1,5 VSEL1
1,5 VBUS_P_CTRL
VBUS_MON_GPIO

CCG_XRES 5
CC2 3,5
I2C_SDA_EC 5
HOTPLUG_DET 3,5
SW1/I2C_SDA 3,4,5
OCP 5
OVP_TRIP 5
VSEL2 1,5
VBUS_DISCHRG 5
VBUS_C_CTRL 5

V3P3
R75
DNL
2K
V3P3
R76
DNL
2K

I2C CONNECTOR
J10
M20-9990445
DNL

PCA: 121-60239-01
PCB: 600-60271-01
FAB DRW: 610-60275-01
ASSY DRW: 620-60283-01

CYPRESS SEMICONDUCTOR © 2016

Title: CCG EVK BASE BOARD - CCG		
Size: A4	Document Number: 630-60281-01	Rev: 7.0
Date: Wednesday, May 04, 2016	Sheet 5 of 6	

Revision	Description of the change
2.0	1. R75 AND R76 MARKED AS DNL 2. R19 CHANGED FROM 1K TO 0E 3. R17 CHANGED FROM 1K TO 10K AND C19 FROM 0.022UF TO 0.001UF 4. J1 PART NUMBER CHANGED. 5. V3P3 TEST POINT ADDED 6. FUSE (F1) REMOVED 7. CHANGED D4 PART NUMBER AS PMEG3050BEP,115 8. ORING IC U12 AND ITS CIRCUITS REMOVED AND DIODE D6, D9 ADDED INSTEAD. 9. R74 VALUE CHANGED FROM 100K TO 10K 10. R61 DNL REMOVED 11. 22V 250mA BOOST CONVERTER (U9) CIRCUITS REMOVED
3.0	1. U14 INPUT VOLTAGE (16TH PIN) CHANGED FROM 24VDCIN TO 24VDC (AFTER DIODE D4) 2. R13 VALUE CHANGED FROM 0E TO 100K 3. C68 1uF ADDED FOR U3.21 PIN 4. C69 1uF ADDED FOR U3.14 PIN 5. R8 0603 0E RESISTOR ADDED INBETWEEN 24VDC AND VCC POWER OF U3 6. D7 ZENER DIODE (3SMBJ5935B-TP) ADDED IN THE VCC POWER LINE OF U3 AND MARKED AS DNL. 7. J7 CONNECTOR PITCH CHANGED FROM 2.54MM TO 5MM 8. C61 MOVED AFTER D4 DIODE AND ZENER DIODE(D10) "SMBJ24A-TR" ADDED AFTER D4 AND C60 REMOVED. 9. C67 COMPONENT VALUE CHANED FROM 0.1uF TO 1uF 10.ESD DIODE ADDED TO SBU1, SBU2, CC1 AND CC2 NETS IN J3. 11.SH1, SH2, SH3, SH4,SH5, SH6 CONNECTED THROUGH R, C TO GROUND 12.ESD DIODE ADDED TO D+, D- NETS IN J3. 13.ESD DIODE ADDED TYPE-C_VBUS NETS IN J3.
4.0	1. C75 ADDED. 2. MINOR TEXT CHANGES DONE. 3. I2C ADDRESS SELECTION TABLE ALSO UPDATED.
5.0	1. R66 1M 0603 PAD RESISTOR ADDED INBETWEEN SOURCE AND GATE OF Q2. 2. C75 10uF CHANGED FROM 0402 TO 0603 PACKAGE. 3. R22 VALUE CHANGED FROM 0E TO 330E.
6.0	1. 5-20V POWER STAGE REGULATOR CIRCUITS CHANGED IN PAGE1 AND USB PROVIDER POWER MONITORING CIRCUITS WERE ADDED. 2. D18,R66,R67,R68 WERE ADDED. 3. C30 VALUE CHANGED FROM 10uF TO 4.7uF. 4. R22-R29 VALUES WERE CHANGED. 5. ACROSS R65 TWO TEST POINTS ADDED.
7.0	1. U15 PART NUMBER CHANGD AS TS3704IPT. 2. DNL REMOVED FROM C52 AND C124. 3. R164 CHANGED FROM 15K TO 10K.

PCA: 121-60239-01
PCB: 600-60271-01
FAB DRW: 610-60275-01
ASSY DRW: 620-60283-01

CYPRESS SEMICONDUCTOR © 2016

Title: **CCG EVK BASE BOARD - REV HISTORY**

Size	Document Number	Rev
A4	**630-60281-01**	7.0

Date: Wednesday, May 04, 2016 Sheet 6 of 6